Concrete Mixer Supply.Com

SECTION 17

REPLACEMENT MIXER DRUMS

REPLACEMENT DRUMS

***ORDER FORM** (copy this page, fill in the dimensions and fax CMS.)*

Front Discharge Drums

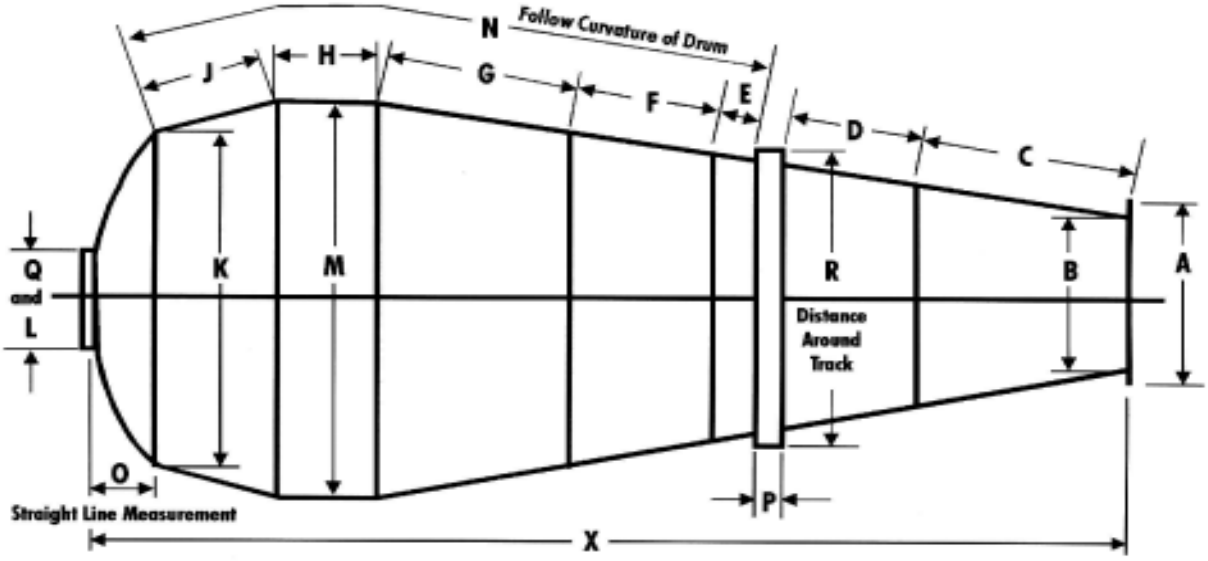

SPECIFY DRUM DIMENSIONS BELOW:

A.	_____	Drip Ring - O.D.
B.	_____	Drip Ring - ID
C.	_____	7th Section
D.	_____	6th Section
E.	_____	5th Section
F.	_____	4th Section
G.	_____	3rd Section
H.	_____	Belly Section
J.	_____	1st Section
K.	_____	Distance Around/DIA.
L.	_____	I.D. Of Flange
M.	_____	Distance Around/DIA.
N.	_____	Head TO TRACK
O.	_____	Flange To Head
P.	_____	Width of Track
Q.	_____	# Of Holes in Flange
R.	_____	Distance Around Track
X.	_____	Straight Line Distance

Customer:_____

Address_____

City:_____

State:_____Zip_____

Telephone #_____

Truck #_____

Make of Mixer this drum is for: MTM

Smith Rex Challenge Oshkosh CMC

Advance or other:_____

Gearbox Type_____

Drum Size :_____Yards

Thickness of Drum: __ 3/16 or __ 1/4”

Thickness of Fins: __ 3/16 or __ 1/4”

Bolt on Hatches: __ 1 or __ 2

Quick Open Hatch: __ Yes or __ No

Front Water (Thru Drum Head) __Yes__No

Drip Edge: __ Square or __ Tapered

REPLACEMENT DRUMS

***ORDER FORM** (copy this page, fill in the dimensions and fax CMS.)*

3 Piece Drums Direct Drive

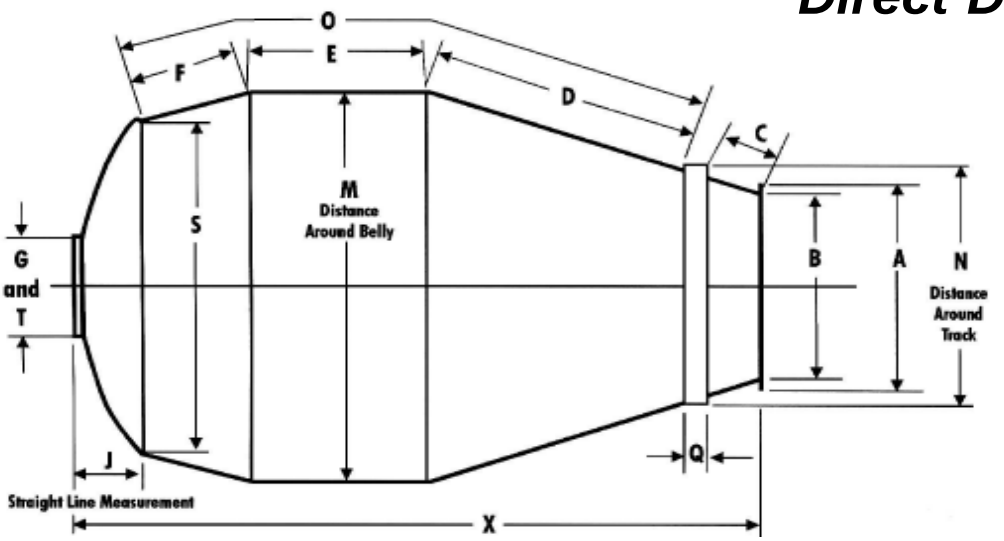

SPECIFY DRUM DIMENSIONS BELOW:

A.		Drip Ring - O.D.
B.		Drip Ring - ID
C.		Drip Ring to Track
D.		3rd Section
E.		Belly Section
F.		1st Section
G.		Flange Diameter I.D.
J.		Flange To Head Weld
M.		Distance Around Drum
N.		Distance Around Track
O.		Race To Head
Q.		Roller Track Width
S.		Distance Around Drum Head
T.		#of Holes in Drive Flange
X.		Straight Line Distance

Customer:_____

Address_____

City:_____

State:_____Zip_____

Telephone #_____

Truck #_____

Make of Mixer this drum is for: MTM

Smith Rex Challenge Oshkosh CMC

Jaeger Rocket- other:_____

Gearbox Type_____

Drum Size :_____Yards

Thickness of Drum: __ 3/16 or __ 1/4”

Thickness of Fins: __ 3/16 or __ 1/4”

Bolt on Hatches: __ 1 or __ 2

Quick Open Hatch: __ Yes or __ No

Front Water (Thru Drum Head) __Yes__No

Drip Edge: __ Square or __ Tapered

REPLACEMENT DRUMS

***ORDER FORM** (copy this page, fill in the dimensions and fax CMS.)*

4 Piece Drums Direct Drive

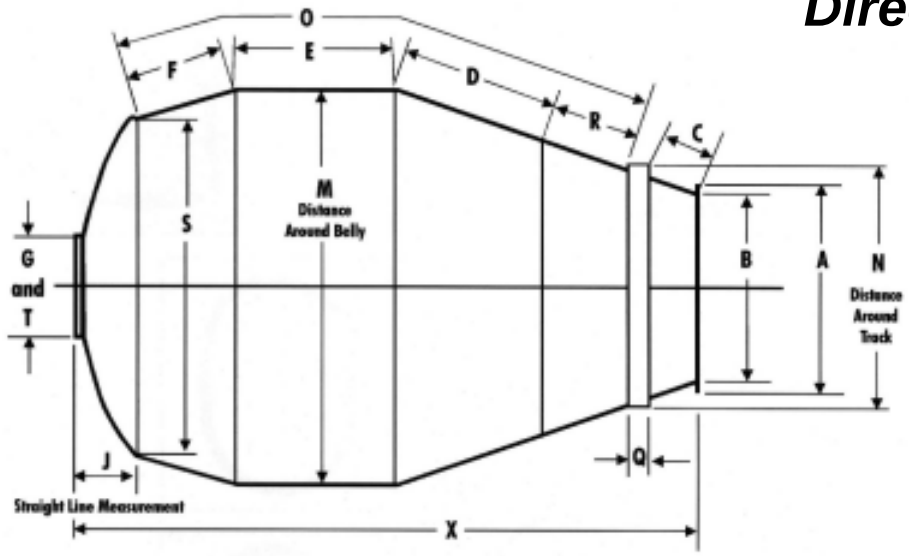

SPECIFY DRUM DIMENSIONS BELOW:

A.	_____	Drip Ring - O.D.
B.	_____	Drip Ring - ID
C.	_____	Drip Ring to Track
D.	_____	3rd Section
E.	_____	Belly Section
F.	_____	1st Section
G.	_____	Flange Diameter I.D.
J.	_____	Flange To Head Weld
M.	_____	Distance Around Drum
N.	_____	Distance Around Track
O.	_____	Race To Head
Q.	_____	Roller Track Width
R	_____	4th Section
S.	_____	Distance Around Drum Head
T.	_____	#of Holes in Drive Flange
X.	_____	Straight Line Distance

Customer:_____

Address_____

City:_____

State:_____Zip_____

Telephone #_____

Truck #_____

Make of Mixer this drum is for: MTM

Smith Rex Challenge Oshkosh CMC

Jaeger Rocket- other:_____

Gearbox Type_____

Drum Size :_____Yards

Thickness of Drum: __ 3/16 or __ 1/4”

Thickness of Fins: __ 3/16 or __ 1/4”

Bolt on Hatches: __ 1 or __ 2

Quick Open Hatch: __ Yes or __ No

Front Water (Thru Drum Head) __Yes__No

Drip Edge: __ Square or __ Tapered

REPLACEMENT DRUMS

HATCH GASKETS

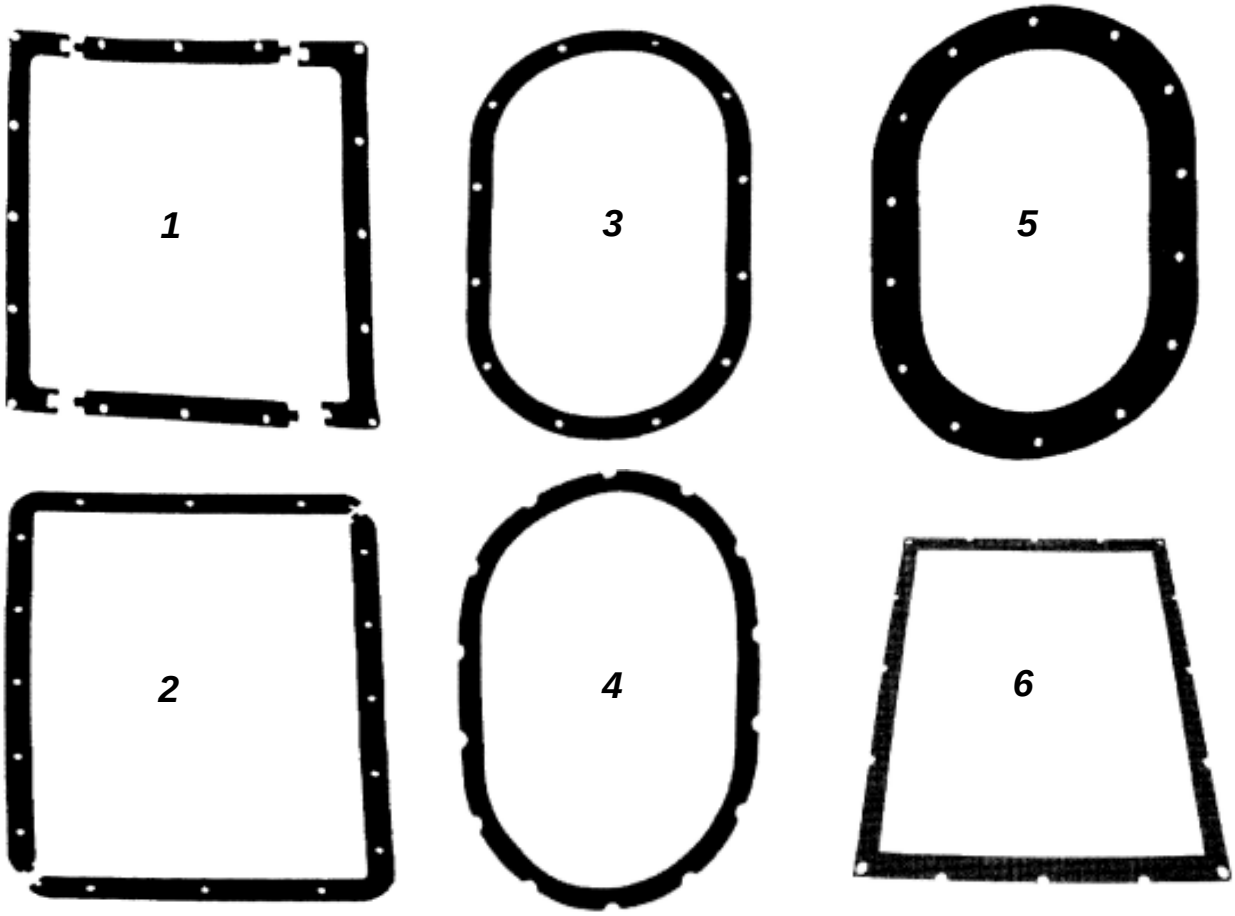

Item #	CMS #	OEM Part#	Description of Part
1	D 1005	290292-1 & 2	REX Hatch Gasket -Square
2	D 1014	215208	MTM Hatch Gasket 18” x 24”
3	D 1002	82633A	MTM Hatch Gasket - Oval
4	D 1006	3286003	CEM/Challenge & MTM Gasket
5	D 1015	20004	Challenge Drum Hatch Gasket
6	D 1016	3508007	Smith/Rex Hatch Gasket

REPLACEMENT DRUMS
SMITH 2 PIECE
DRUM FINS & CAPS

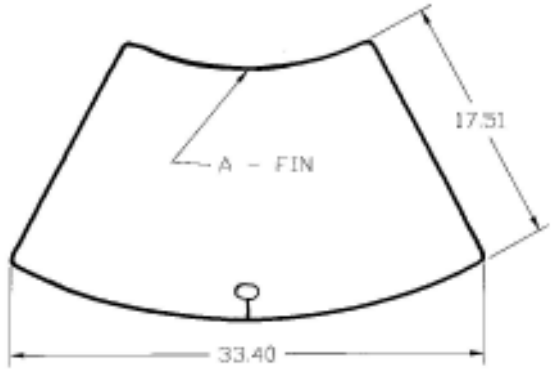

D 1022 A Fin A 3/16
D 1023 A Fin A 1/4"

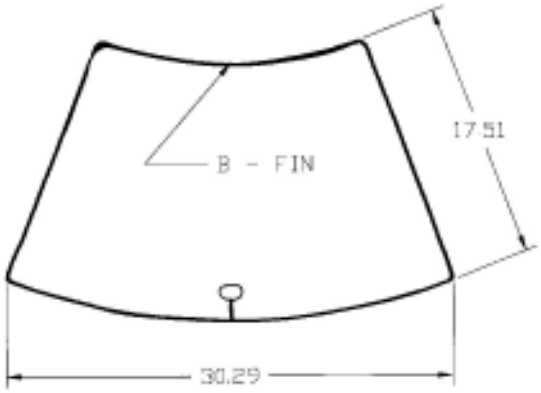

D 1022 B Fin B 3/16
D 1023 B Fin B 1/4"

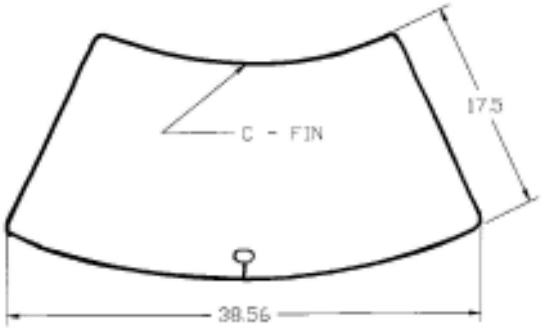

D 1022 C Fin C 3/16
D 1023 C Fin C 1/4"

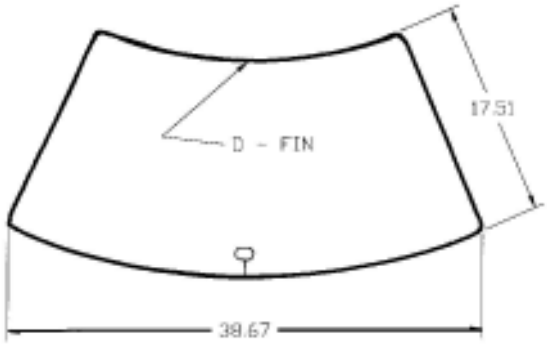

D 1022 D Fin D 3/16
D 1023 D Fin D 1/4"

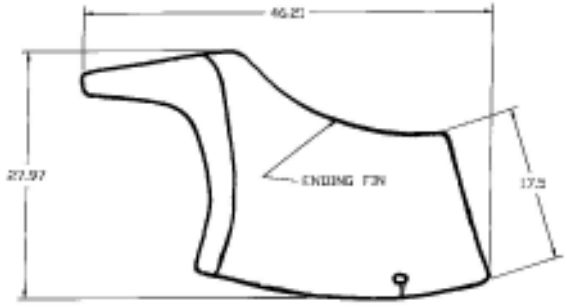

D 1022 E Fin E 3/16
D 1023 E Fin E 1/4"

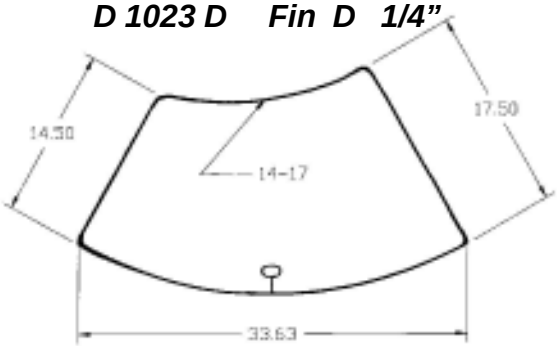

D 1022 F Fin F 3/16
D 1023 F Fin F 1/4"

REPLACEMENT DRUMS

SMITH 2 PIECE
DRUM FINS & CAPS

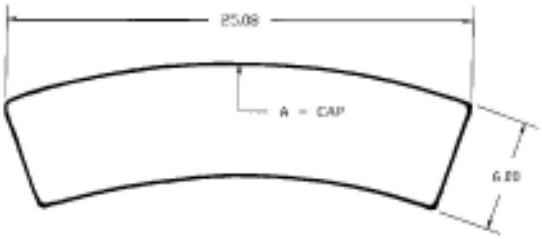

D 1011 A Cap A 3/16
D 1012 A Cap A 1/4"

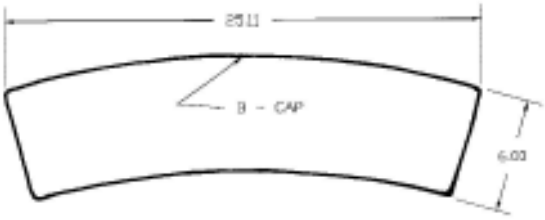

D 1011 B Cap B 3/16
D 1012 B Cap B 1/4"

D 1011 C Cap C 3/16
D 1012 C Cap C 1/4"

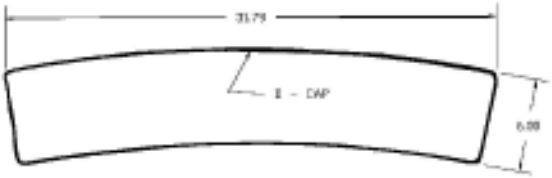

D 1011 D Cap D3/16
D 1012 D Cap D 1/4"

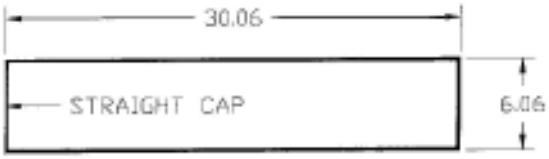

D 1011 E Cap E 3/16
D 1012 E Cap E 1/4"

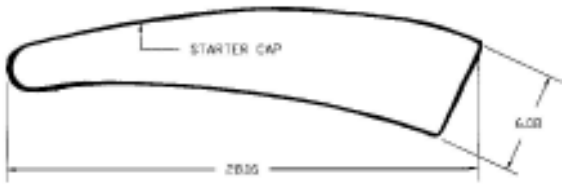

D 1011 F Cap F 3/16
D 1012 F Cap F 1/4"

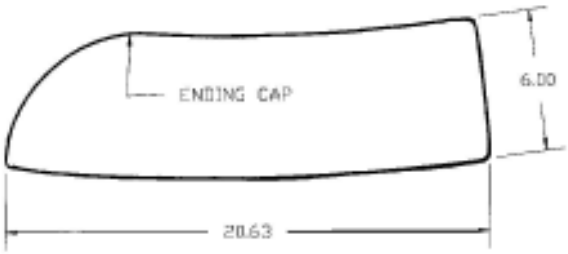

D 1011 G Cap G 3/16
D 1012 G Cap G 1/4"

D 1011 Cap Kit 3/16 Complete
D 1022 Fin Kit 3/16 Complete
D 1012 Cap Kit 1/4" Complete
D 1023 Fin Kit 1/4" Complete

REPLACEMENT DRUMS

SMITH 2 PIECE

DRUM FINS & CAPS

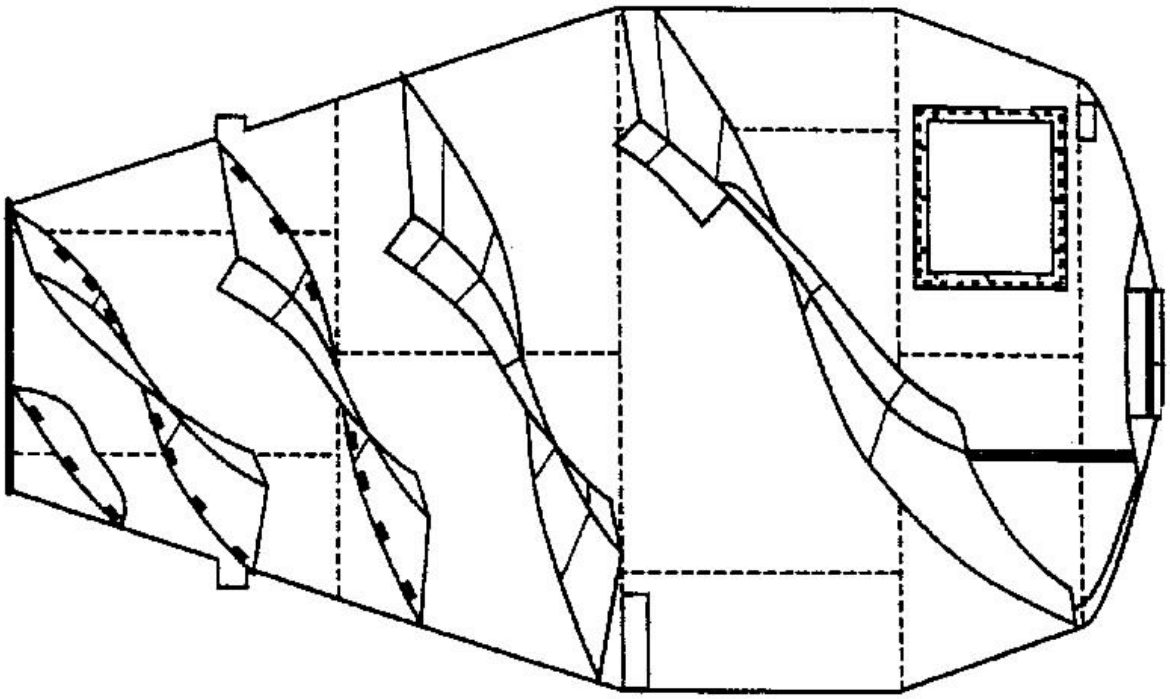

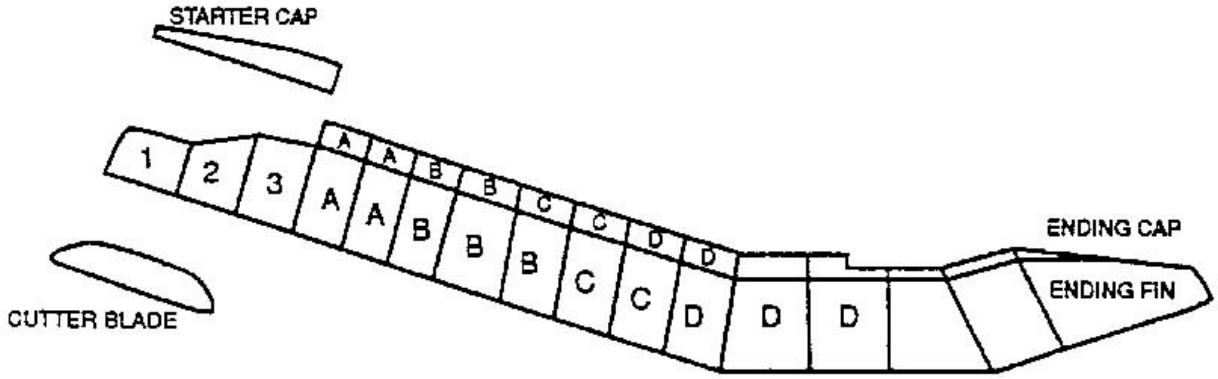

REPLACEMENT DRUMS

INSTALLATION OF 2PIECE CAP AND FIN

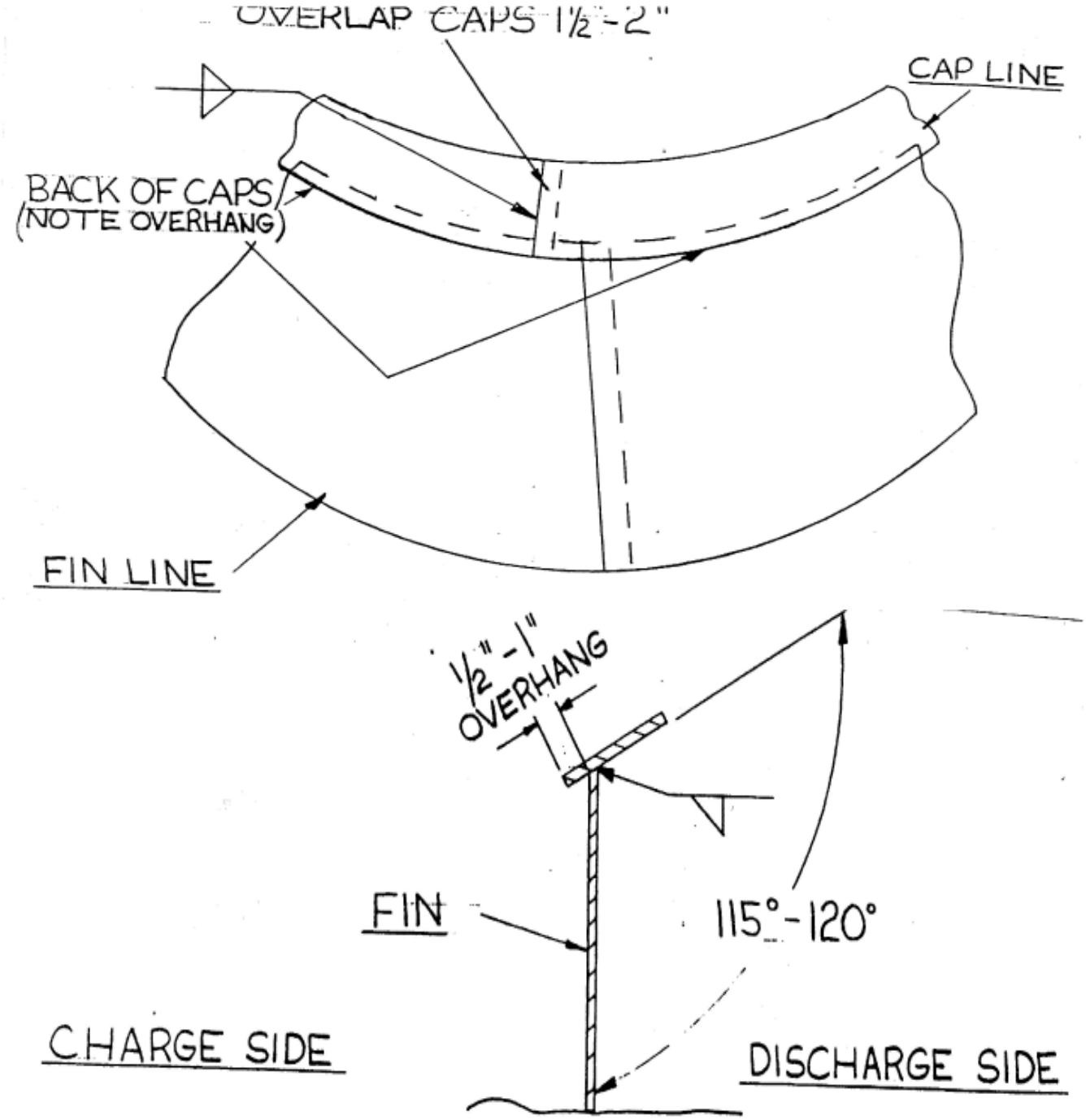

REPLACEMENT DRUMS

UNIVERSAL PRESSED FINS & FIN CAPS

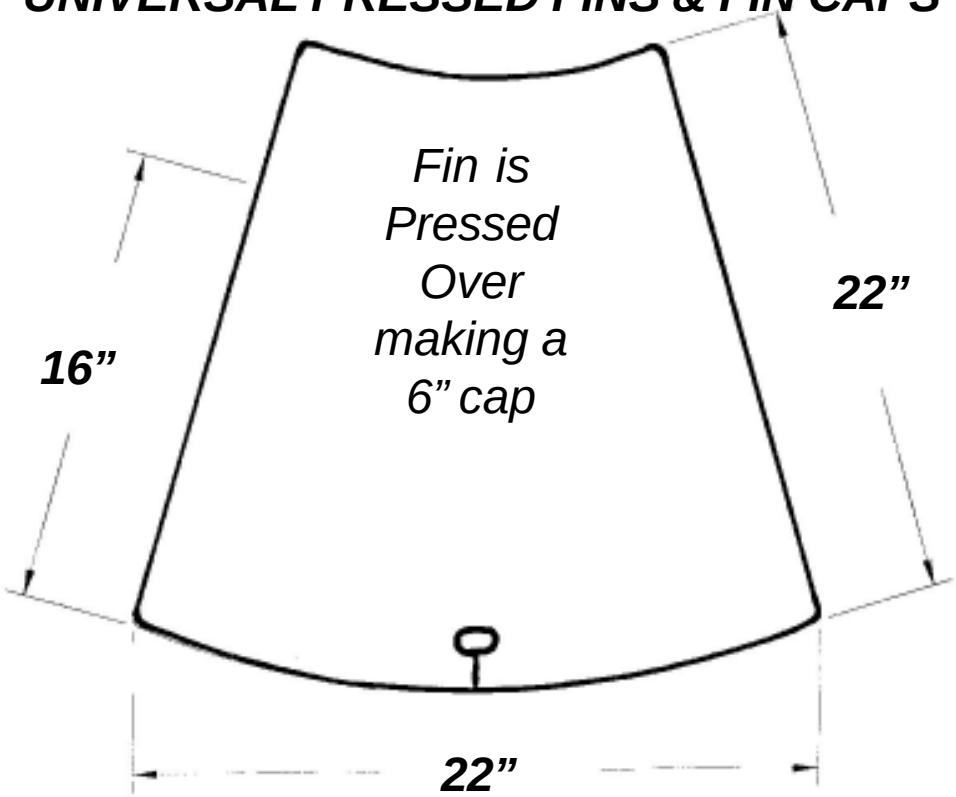

CMS Part #

D1000 3/16" Pressed Fin 26 lbs. Rear Discharge Mixer
D1000C 3/16" Front Discharge
D1000A 1/4" Pressed Fin 32 lbs for Rear Discharge Mixer
D1000E 1/4" Front Discharge
It takes 16-20 fins to replace the ones in the mixing section of a 10 yard rear discharge drum. Front Discharge takes 22+ to replace mixing section.

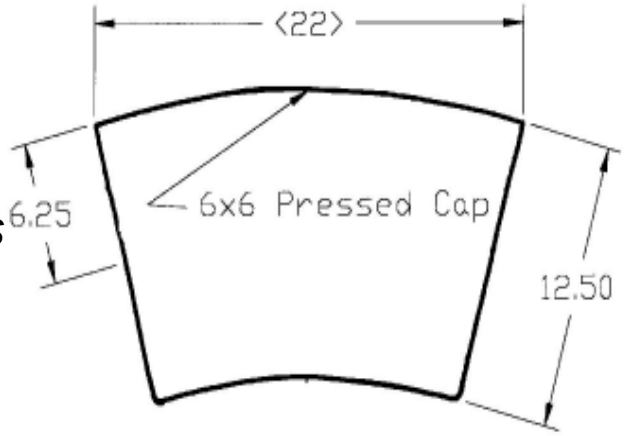

D1000B Pressed Fin Cap 13 lbs.

REPLACEMENT DRUMS

QUICK OPEN HATCH
Rex & Smith Style

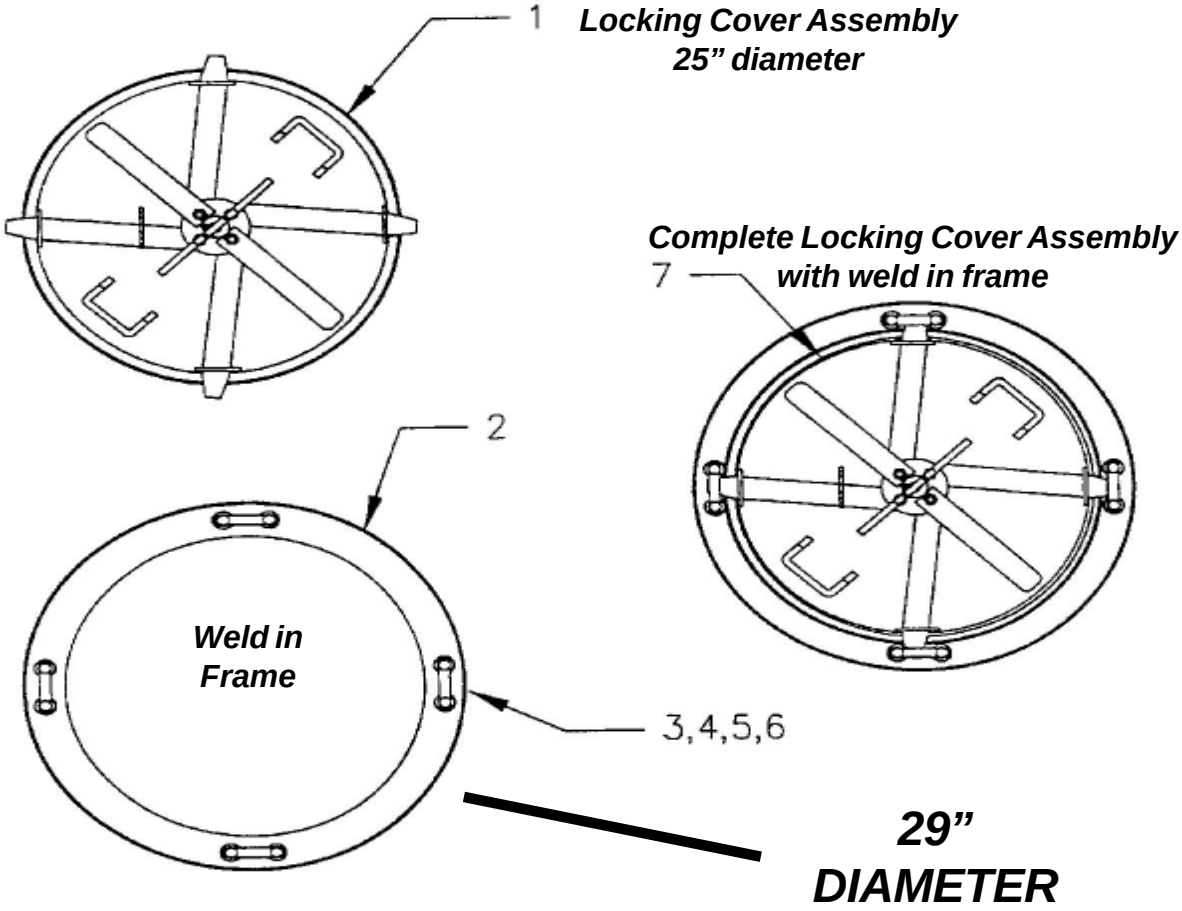

Item #	CMS #	OEM #	Description of Part
1	D 1001AK	265037	Quick Open Cover Assembly
2	D 1001A	267172	Quick Open Weld in Frame Assy 1/4"
2	D 1001 E		Quick Open Weld in Frame Assy 3/8"
3	D 1001 B		Quick Open Hatch Bracket
4	UW 5000		1/2" Washer
5	B 5250		Hex Bolt, 1/2-13 x 2-1/2"
6	D1000 C	27377	Spacer
7	D 1001 A		Rubber Tube - Hatch Gasket

REPLACEMENT DRUMS

QUICK OPEN HATCH
REX STYLE
A265039
D1001AK

QUICK OPEN HATCH
McNEILUS STYLE
131470
D2005AK

REPLACEMENT DRUMS

DRUM HEAD LINER KIT ORDER FORM

***Customer Name*_____**

Drum Make*_____ *Size*_____ *Yards

***Drum Head Diameter*_____**

Drive

__ ZF __ Rex 770 __ Challenge 08/SKK __ Rockwell
__ Transmital Large __ Transmital Small __Other __ Chain Drive

DIMENSIONS (see illustration below)

A: _____ inches
B: _____ inches
C: _____ inches

INNER

76" HEAD
C = 21"
B = 54" 2pcs

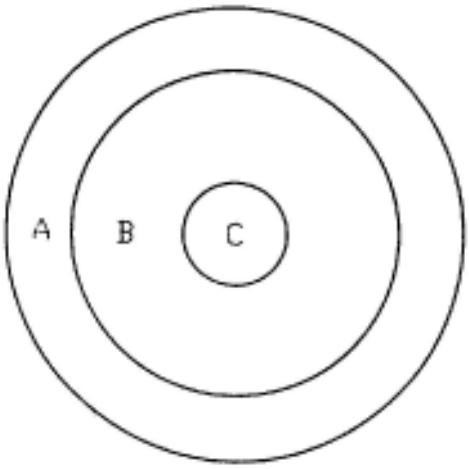

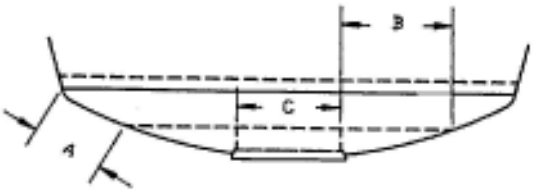

REPLACEMENT DRUMS

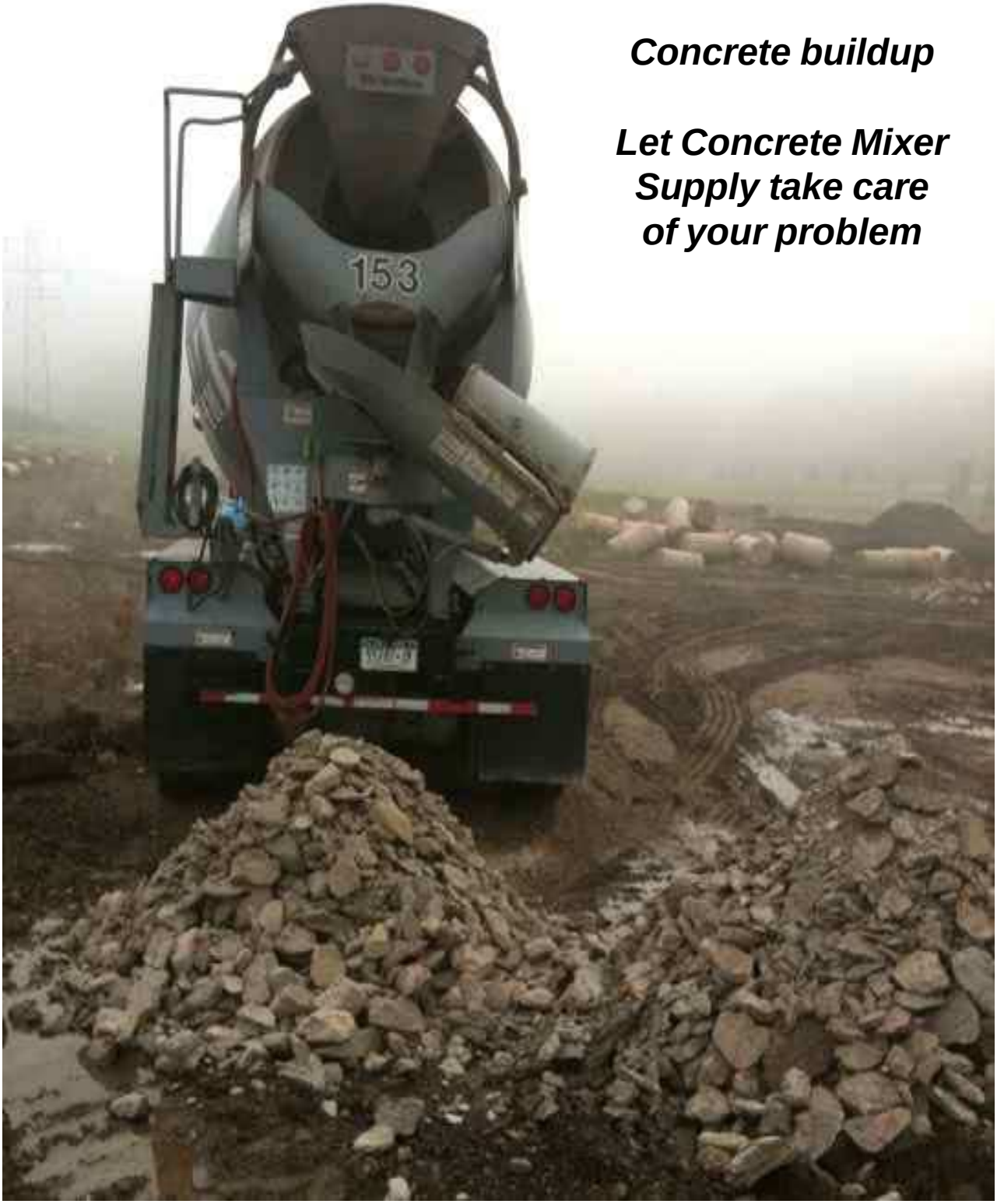

Concrete buildup

Let Concrete Mixer Supply take care of your problem

REPLACEMENT DRUMS

DRUM CHANGES

SANDBLASTING, REPAIRS, AND PAINTING

REPLACEMENT DRUMS

INSTALLING NEW DRUMS AT OUR FACILITY IN OLEAN, NY

DRUM DELIVERY TO YOUR LOCATION - FOR YOU TO INSTALL

REPLACEMENT DRUMS

Call Concrete Mixer Supply to do your rollover drum repairs

You will like the results!